Magic Amusement

Magic

Founded in 2015, we have over 10 years of experience manufacturing amusement equipment.

Official Website: magicmoli.com
Alibaba Store: magicamusement.en.alibaba.com



One-stop Amusement Equipment Solution
R&D, Production, Sales & After-sales Service

Founded in 2015, MAGIC AMUSEMENT is a professional manufacturer. We focus on the research, development, production and sales of amusement rides, electronic devices, bumper cars, go-karts and recreational sports equipment.

We have modern production workshops and offer full OEM, ODM and private labeling services. Our products are exported across the globe. We sincerely invite international agents and distributors to build long-term win-win cooperation with us.

Magic Amusement

TRENDY
PLAY
TECH
AMUSEMENT

★ Focus on R&D, Production & Sales

★ Self-owned Factory with Complete Production Lines

★ Global Supply & Agent Cooperation Support

★ Your Reliable Partner for Amusement Equipment






Our Main Products

- Amusement Rides
- Bumper Cars
- Go-karts
- Sports & Leisure Products
- Electronic Devices & Spare Parts









Why Choose Us

TRENDY
PLAY
TECH
AMUSEMENT

★ Professional In-house R&D Team & Self-owned Factory
★ Strong Production Capacity & Stable Product Quality
★ Full Support for OEM, ODM & Custom Design
★ Custom Logo & Private Label Service Available
★ Global Shipping & Worldwide Supply
★ Exclusive Cooperation for Global Agents & Distributors
★ Your Trusted Amusement Equipment Partner



Magic Bumper Car



Bumper Car (Lemon Yellow)



Bumper Car (Hermès Orange)



Bumper Car (Tiffany Blue)

Overall Diameter: 1800 mm

Magic Bumper Car IP

Customization Available







Candy Bumper Cars







Candy Bumper Cars







Star Bear Bumper Cars

Overall Diameter: 1800 mm

Magic Bumper Car Technical Specifications



Bumper Cars

Overall Diameter: 1800 mm

Overall Diameter: 1.8 m
Rated Power: 900 W
Power Consumption: The standard model runs for 10 hours on a full charge, and the deluxe model runs for 8 hours on a full charge.
Running Speed: Adjustable from 2 km/h to 10 km/h (Speed below 7 km/h is exempt from routine inspection)
Floor Requirements:The ground must be smooth and flat. Tiles and epoxy floors are ideal. For icy or snowy ground, please replace with dedicated tires.
Space Requirement: 1 set per 13 ~ 15 square meters

Magic Installation Guidelines





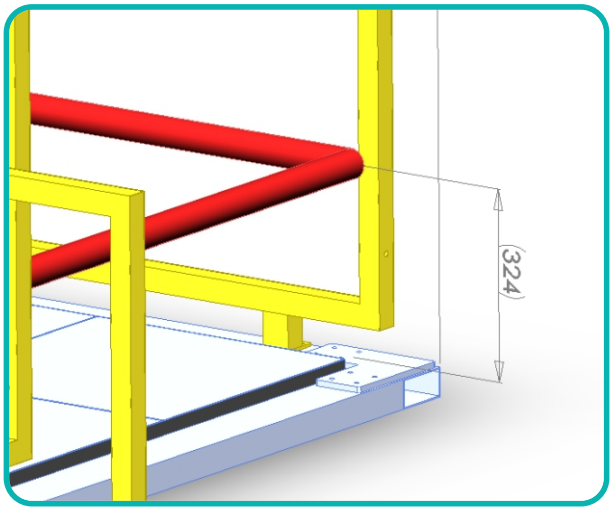

The impact center of the bumper car is 33 cm above the ground.The recommended height for anti-collision strips is 25 cm ~ 39 cm.

Magic Bumper Car Showcase










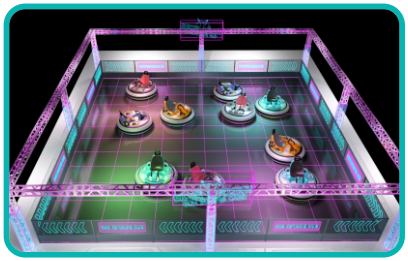


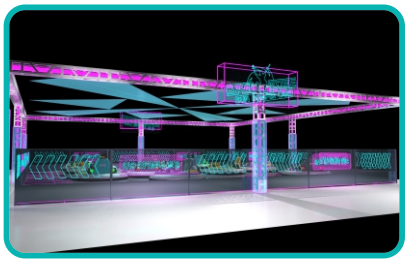



Magic Bumper Car Introduction

Our Magic Bumper Car is a high-performance electric amusement ride equipped with a 3-speed gearbox transmission system. It is popular worldwide and suitable for kids of all ages.

A group of 6 to 8 bumper cars requires a flat and smooth cement floor of 100 to 200 square meters. This product greatly cuts down venue investment costs. You can set up guardrails with steel frames or inflatable fences, and there is no need to install the traditional overhead and floor power grid.

The control system is simple and easy to use. Operate the left and right control levers to speed up and spin in place. It provides exciting rotating fun that ordinary bumper cars cannot offer.

With strong and stable power output, our bumper cars deliver excellent controllability. Riders can enjoy an immersive driving experience.



Diagram 1



Diagram 2

Magic Go-Karts





D1400 × W1000 × H450 mm





D1400 × W1000 × H450 mm









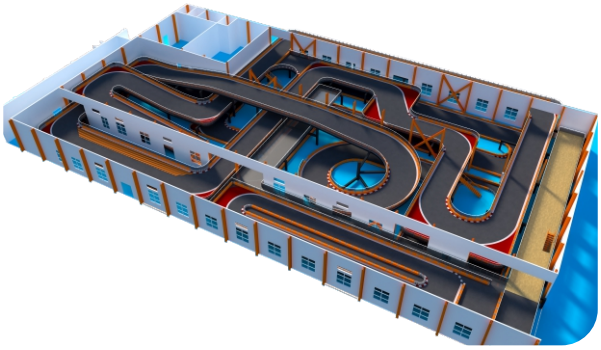

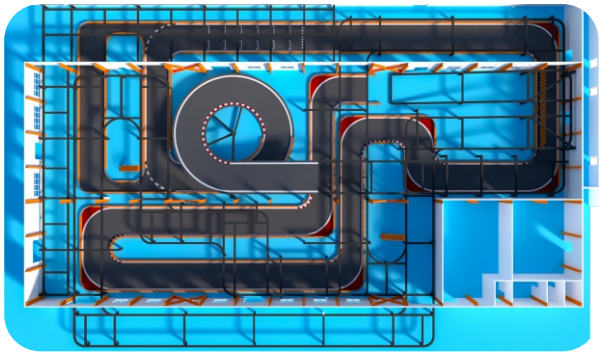

Magic Bull & Bungee



Mechanical Bull

D5000 × W5000 × H2000 mm





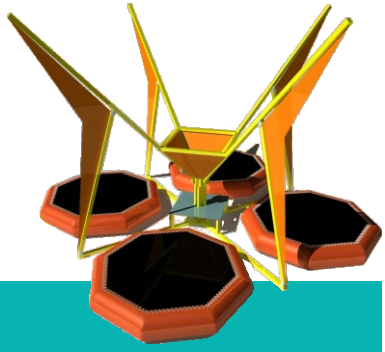

Bungee Jumping

D5566 × W5418 × H4256 mm

Water Gun & Shooting Game Cabinets



Nailong Aqua Warfare



Duckling Warfare

Magic Nailong Collection



Nailong Pinball

D1810×W1700×H2660 mm



Nailong Flying Ball

D1820×W1720×H2730 mm



Nailong Shooting Challenge

D1785×W1925×H1810 mm



Nailong Gunner

D1910×W1770×H2980 mm



Nailong Drink Station

D940×W1320×H1880 mm



Nailong Trend Play

W1438×H1955 mm



Battle of Dino Beast

D1900×W1730×H2750 mm



Nailong Hockey

D1450×W2290×H2430 mm

Magic Nailong Mini Series



Nailong 4-Player

D1715×W4732×H2577 mm



Nailong 3-Player

D1715×W3549×H2577 mm



Nailong Mini Bowling

D1175×W1680×2495 mm



Nailong Mini Marbles

D1175×W1680×2550 mm



Nailong Mini Flying Ball

D1175×W1680×2550 mm



Nailong Mini Rolling Ball

D1130×W1680×2610 mm



Nailong Mini Gunner

D1130×W1630×2580 mm



Nailong Mini Shooter

D1175×W1680×2580 mm

Magic Ultraman Series



Ultraman vs. Monster

D1910×W1770×H2960 mm



Ultraman Shooting Challenge

D1925×W1785×H2000 mm



Ultraman Marbles

D1790×W1860×H2670 mm



Ultraman Energy Supply Tank

D900×W1660×H2480 mm

Magic Amusement



Shark Gunner
D1910×W1770×H2800 mm



Shark Shooting Challenge
D1920×W1790×H2640 mm



Shark Marbles
D1820×W1720×H2780 mm



Cola Player
D959×W1980×H1946 mm

Magic Amusement



Danzi Party
W1330×H2163 mm



Spin 2 win



Happy Jumping Ball 2
D1250×W1600×H2250 mm



Trendy 2D Party
W1438×H1955 mm

Magic Amusement



Planet Spin

W1436×H1470 mm



Tide Energy Claw Machine 2

D1590×W1232×H2330 mm



Spin Fun 2S

D1435×H2335 mm



Spin Fun

D1680×H2260 mm

Magic Amusement



Drink Master
D1656×W901×H2310 mm



Trend Energy Box
D950×W1500×H2249 mm



Tide Energy Gunner
D1594×W1657×H2632 mm



Trend Energy Coin Pusher
D1760×W1650×H2500 mm

Magic Amusement



Interstellar Gunner
D1650×W1796×H2300 mm



Interstellar Gunner 7S
D1650×W1625×H2100 mm



Rapid Journey (Racing Car)
D1761×W2200×H2395 mm



Little Gunner 3S
D1050×W1650×H2500 mm



Little Gunner III
D990×W1820×H2150 mm

Magic Amusement

Guangzhou Magic Amusement Equipment Co., Ltd.

Contact: Yuki
Tel / WeChat: +86-137-6331-9191
Email: zhouliuyuanyuki@gmail.com
Add: E9, E26, Xingli Animation Industrial Park, Panyu District, Guangzhou City, China

WeChat WhatsApp TikTok Instagram

Magic